FLAME FEND

FLAME SAFE

SAFER BUILDINGS.
STRONGER TOMORROW.

CLASSIFIED UL R27369

FIRE & SMOKE DAMPERS

PROTECTING LIFE & PROPERTY
THROUGH SMART FIRE SAFETY SOLUTIONS





UL Certified

1Hr 3Hr UL555/s

24/230v Actuators

Ideal For Commercial & Industrial Buildings

Key features

- UL 555 classified fire dampers, 1½ and 3 hour ratings (UL file R27369)
- UL 555S classified smoke and combination dampers, leakage Class I and III
- Airflow and leakage rated in either direction, up to 10.2 m/s and 1000 Pa
- Elevated temperature rated to 121°C
- Fail-close or fail-open actuator options at 24 V, 120 V and 230 V, from Honeywell or Belimo
- Limit switches for BMS open/closed indication
- Curtain fire dampers with 100% free area, blades out of the airstream
- Rectangular and circular duct connections

Model	Type	Fire rating	Leakage class	System	Mounting	Max single section	Max multi-section
FFD (VS)	Curtain fire damper	1½ hr	–	Static	Vertical	965 x 1092	1930 x 2184 / 2692 x 2692
FFD (VS)	Curtain fire damper	3 hr	–	Static	Vertical	965 x 1080	Not listed
MFD-90 / MFD-180	Multi-blade fire damper	1½ / 3 hr	–	Static and dy-namic	Vertical	914 x 914	1829 x 1829
MSD-250	Smoke damper	–	I, II, III	Dynamic	Vertical or horizontal	914 x 914	3658 x 1829
MSFD-90 / MSFD-180	Combination fire/smoke	1½ / 3 hr	I, II, III	Dynamic	Vertical	914 x 914	1829 x 1829
MSFD-90-III / MSFD-180-III	Combination fire/smoke	1½ / 3 hr	III	Dynamic	Vertical	914 x 914	Single only

Standard Sizes

Standard Sizes Any Combination of W x H			
Width (W)	Height (H)	Depth (D)	Module
8"	8"	6"	Single
8"	9"	6"	Single
10"	10"	6"	Single
12"	12"	6"	Single
16"	16"	6"	Single
20"	20"	6"	Single
24"	24"	6"	Single
36"	36"	6"	Single
72"	72"	6"	Multiple
>72″	>72″	6″	Mullion
			Constructions



MODEL: FFD (VS)

FEATURES

- Curtain blade type
- Fire rating: UL 555 tested - 1 ½ hour and 3 hour for static systems
- 100 % free area (blades outside the airstream)
- Complies to NFPA 90A & SMACNA requirements
- Dampers available in single and multi-section up to 106 " x 106 " (2692 x 2692 mm)

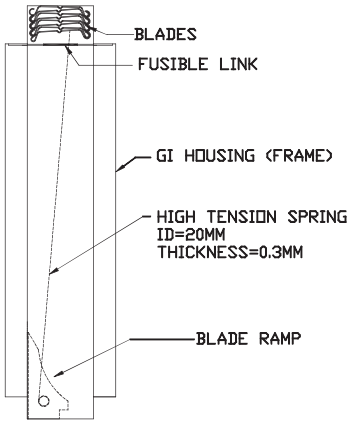

Standard Construction of Flamesafe Fire Damper

STANDARD CONSTRUCTION

Frame:	1.20 mm (18 G) galvanised steel
Blades	0.80 mm (22 G) galvanised steel with interlockings
Fusible link	Rated at 165 °F and secured by 18 G steel straps
Blade ramp	1.20 mm (18 G) thick galvanised steel
Springs	0.30 mm thick, 19 mm wide stainless steel
Installation	Vertical
Finish	Mill finish

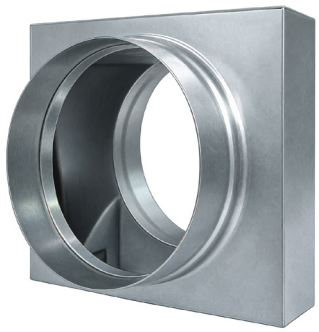

Fire Damper For Round Ducts

DAMPER HEIGHT & WALL OPENING DIMENSIONS

Damper Height (H)	Hat Section (X) mm
Upto 70	30
71 – 125	35
126 – 175	45
176 – 250	55
251 – 300	60
301 – 375	65
376 – 425	70

426 – 500	75
501 – 550	80
551 – 625	85
626 – 700	90
701 – 775	95
776 – 850	100
851 – 875	110
876 – 900	155

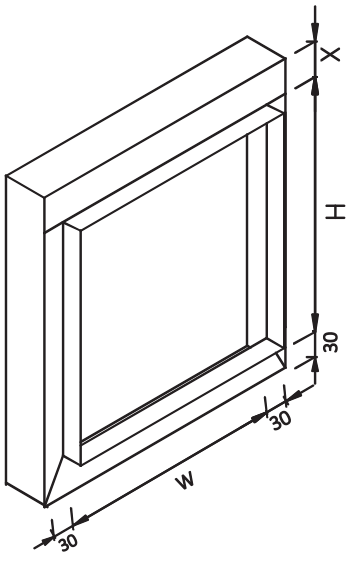

FLANGED CONNECTION SYSTEM CAN ALSO BE USED AS BREAK AWAY CONNECTIONS WHEN INSTALLED AS SHOWN ON THE RIGHT.

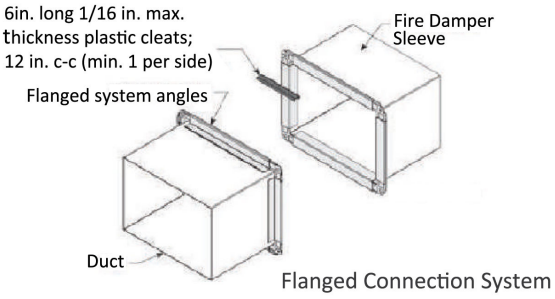

Vertical Installation

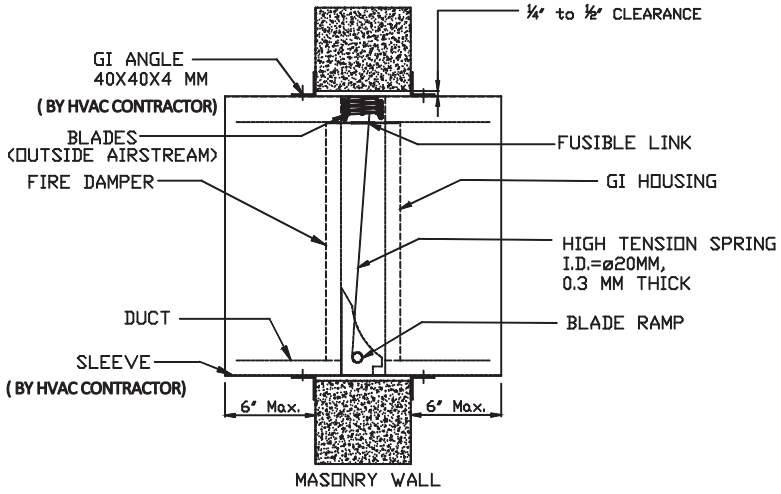

Certification

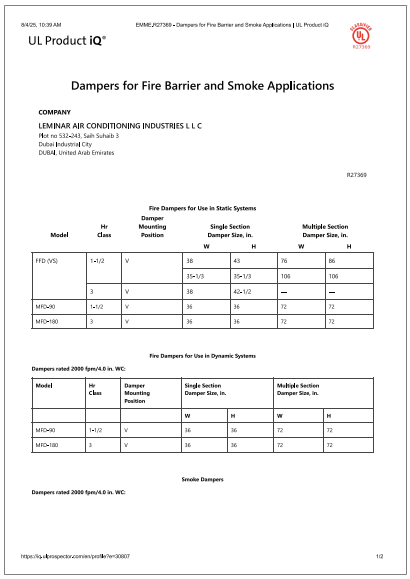

8/4/25, 10:39 AM EMMEJR27369 - Dampers for Fire Barrier and Smoke Applications | UL Product iQ

UL Product iQ®

Dampers for Fire Barrier and Smoke Applications

COMPANY

LEMINAR AIR CONDITIONING INDUSTRIES L L C
Plot no 532-243, Saih Suhaib 3
Dubai Industrial City
DUBAI, United Arab Emirates

R27369

Fire Dampers for Use in Static Systems

Model	Hr Class	Damper Mounting Position	Single Section Damper Size, in. W	Single Section Damper Size, in. H	Multiple Section Damper Size, in. W	Multiple Section Damper Size, in. H
FFD (VS)	1-1/2	V	38	43	76	86
			35-1/3	35-1/3	106	106
	3	V	38	42-1/2	—	—
MFD-90	1-1/2	V	36	36	72	72
MFD-180	3	V	36	36	72	72

Fire Dampers for Use in Dynamic Systems

Dampers rated 2000 fpm/4.0 in. WC:

Model	Hr Class	Damper Mounting Position	Single Section Damper Size, in. W	Single Section Damper Size, in. H	Multiple Section Damper Size, in. W	Multiple Section Damper Size, in. H
MFD-90	1-1/2	V	36	36	72	72
MFD-180	3	V	36	36	72	72

Smoke Dampers

Dampers rated 2000 fpm/4.0 in. WC:

https://iq.ulprospector.com/en/profile?id=30807 1/2

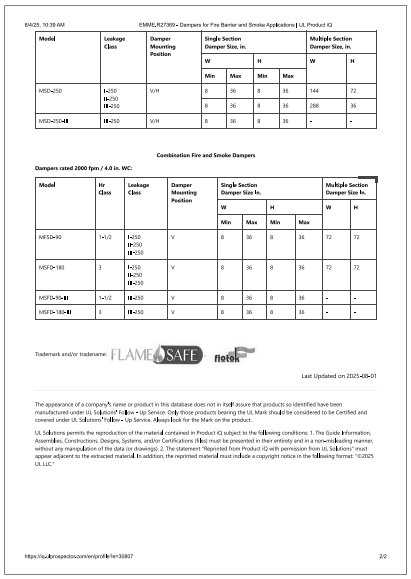

8/4/25, 10:39 AM EMMEJR27369 - Dampers for Fire Barrier and Smoke Applications | UL Product iQ

Model	Leakage Class	Damper Mounting Position	Single Section Damper Size, in. W Min	Single Section Damper Size, in. W Max	Single Section Damper Size, in. H Min	Single Section Damper Size, in. H Max	Multiple Section Damper Size, in. W	Multiple Section Damper Size, in. H
MSD-250	I-250 II-250 III-250	V/H	8	36	8	36	144	72
			8	36	8	36	288	36
MSD-250-III	III-250	V/H	8	36	8	36	-	-

Combination Fire and Smoke Dampers

Dampers rated 2000 fpm / 4.0 in. WC:

Model	Hr Class	Leakage Class	Damper Mounting Position	Single Section Damper Size In. W Min	Single Section Damper Size In. W Max	Single Section Damper Size In. H Min	Single Section Damper Size In. H Max	Multiple Section Damper Size In. W	Multiple Section Damper Size In. H
MFSD-90	1-1/2	I-250 II-250 III-250	V	8	36	8	36	72	72
MSFD-180	3	I-250 II-250 III-250	V	8	36	8	36	72	72
MSFD-90-III	1-1/2	III-250	V	8	36	8	36	-	-
MSFD-180-III	3	III-250	V	8	36	8	36	-	-

Trademark and/or tradename: FLAMESAFE fleetek

Last Updated on 2025-08-01

The appearance of a company's name or product in this database does not in itself assure that products so identified have been manufactured under UL Solutions' Follow-Up Service. Only those products bearing the UL Mark should be considered to be Certified and covered under UL Solutions' Follow-Up Service. Always look for the Mark on the product.

UL Solutions permits the reproduction of the material contained in Product iQ subject to the following conditions: 1. The Guide Information, Assemblies, Constructions, Designs, Systems, and/or Certifications (Ids) must be presented in their entirety and in a non-misleading manner, without any manipulation of the data (or drawings). 2. The statement "Reprinted from Product iQ with permission from UL Solutions" must appear adjacent to the extracted material. In addition, the reprinted material must include a copyright notice in the following format: "©2025 UL LLC."

https://iq.ulprospector.com/en/profile?id=30807 2/2

COMBINATION OF MOTORISED SMOKE & FIRE DAMPER

UL 555/555S - CLASSIFIED COMBINATION OF FIRE SMOKE DAMPER

Model:	MSFD-180 and MSD -180
Type:	Motorized Fire Smoke Damper
Fire Rating:	3 hrs hour
Leakage Rating:	Class - I
Blade Type:	Galvanized Steel (GI)
Construction:	Vertical
Codes:	IBC and National Fire Protection Association (NFPA 80, 90A, 92, 101, and 105)

MSFD 180 Series is a high performance UL 555/555S Classified combination of fire and smoke damper with 3hr. fire rating, installed vertically and is rated for airflow and leakage Class - I leakage in either direction (Upstream and Downstream).



UL- 555/555S TEST RATINGS

Fire Rating:	3 hrs.
Leakage Rating Max Velocity:	Class - I
Velocity:	2000 fpm

Max Operating Pressure:	4.5 in. w.g. (1000 pa)
Operating Temperature:	250 °F (121 °C) for 3 hrs

STANDARD CONSTRUCTION

Frame:	16 gauge (1.5 mm) thick galvanized steel.
Blades:	Parallel operated 3 'V' type blades made of 16 gauge (1.5 mm) thick galvanized steel.
Blade Seals:	Silicon rubber blade seals (Hardness : Shore A 70)
Jamb Seals:	Stainless steel.
Jack Shaft:	12 mm diameter Galvanized steel shaft.

Thermal Response Device (TRD):	165°F (74°C).
Actuator:	Honeywell, Belimo, (24V AC, 120V AC, 230V AC)
Sleeve Minimum	1.2 mm, single section is field or factory installed. Multiple sections are factory installed
Sleeve thickness	16 gauge/1.5 mm as per NFPA table 3-4.6.3.

OPTIONAL FITTINGS

Retaining Angles:	(50 x 50 x 4 mm). Limit Switches for BMS open/close indication.
Indicator:	Externally mounted open, close visible Indicator. Push Button for manual reset of the damper.

Transitions (R):	Neck adapter for round duct connections.
Junction Box:	Optional Construction (UL Certification N/A)
Frame:	Stainless Steel 16 gauge (304/316L)

APPLICATION

MSFDs are designed to be installed in HVAC ductwork at locations that are designated as fire barriers or smoke barriers based on compartmentation.

MSFDs prevent spread of fire/smoke inside residential, commercial and industrial buildings.

MSFDs are typically installed vertically in walls/ partitions and horizontally in shafts.

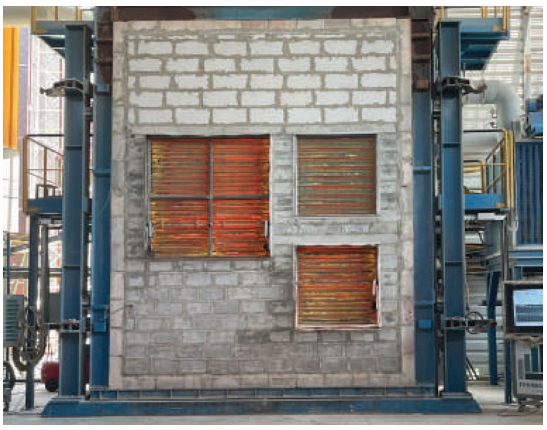

MSFD TESTING

Model : MSFD-180 / MSD -180 UL 555/555S Damper meets the required standards of SMACNA, NFPA, IBC, UL.

MSFD - 180 Series- Model Details				
Model	Material		Damper Operation	
	Frame	Blade	Standard	Optional
MSFD-180	GI	GI	FC	FO

Actuator Location		Operating Voltage	
Standard	Optional	Standard	Optional
Left Side	Right side	230 V	120 V / 24 V

Actuator location standard: Left side from rear view (Jack shaft view)

Optional Construction (UL Certification N/A)
Frame: Stainless Steel 16 gauge (304/316L)
Blade: Stainless Steel 16 gauge (304/316L)

Note :
FC: Fail Close in the event of Fire
FO: Fail Open in the event of Fire
* The temperature ratings are for Honeywell 20 Nm actuators with thermal enclosures.

Module	Size (WxH)	Actuator Options
Single	24" x 24"	Honeywell 3.4 / 9 Nm
		Belimo 3.5/ 8 Nm
		Honeywell 9 /20 Nm
Single	36" x 36"	Belimo 8 Nm /20Nm
Multiple	72" x 72"	Honeywell 9 /20Nm
		Belimo 8 /20 Nm

Standard Sizes Any Combination of W x H			
Width (W)	Height (H)	Depth (D)	Module
8"	8"	6"	Single
8"	9"	6"	Single
10"	10"	6"	Single
12"	12"	6"	Single
16"	16"	6"	Single
20"	20"	6"	Single
24"	24"	6"	Single
36"	36"	6"	Single
72"	72"	6"	Multiple
>72"	>72"	6"	Mullion
			Constructions

UL Classified (see mark on product)

UL Classified to American/Intl safety standards

UL Standard 555 (Listing #R27369)

CLASSIFIED UL R27369

Sizes : 36 " x 36" (914 mm x 914 mm)

Velocity (FPM)	500	1000	1500	2000	2400
Pressure Drop(In-wg)	0.01	0.06	0.12	0.22	0.23

Honeywell Actuators

MS4604 · MS4609 · MS8104 · MS8109

Fast-acting, two-position spring return actuators for fire/smoke control applications

FEATURES

- 3.4 Nm or 9 Nm minimum driving torque, maintained at 176°C
- Designed for smoke control systems requiring UL 555S ratings up to 176°C (UL-marked models)
- Integral spring return with stainless steel internal spring, 15-second spring return timing
- Direct coupled with integral junction box, for on/off (SPST) control
- Reversible mounting for clockwise or anticlockwise spring return
- Silent when holding, with no special cycling required
- Holds rated torque at reduced power
- Die-cast aluminium housing, mounts flush to the damper
- Models available with SPST position-indicating switches (7° and 85° stroke)



MODEL SELECTION

Model	Voltage	Torque	Power (running / holding)	Aux switches
MS4604F1010 / F1210	230 V AC	3.4 Nm	18 W / 11 W	None / 2 x SPST
MS4609F1010 / F1210	230 V AC	9 Nm	23 W / 7 W	None / 2 x SPST
MS8104F1010 / F1210	24 V AC	3.4 Nm	16 VA / 8 VA	None / 2 x SPST
MS8109F1010 / F1210	24 V AC	9 Nm	23 VA / 7 VA	None / 2 x SPST

F1010 = no switches. F1210 = two SPST position switches, designed to pass UL 555S at 176°C for 30 minutes.

SPECIFICATION

Supply	230 V AC ±10% or 24 V AC +20% / -10%, 50/60 Hz
Control	Two-position, SPST
Timing	Drive open 15 s, spring close 15 s (typical)
Rotation	95° ±3°, mechanically limited
Stall torque (max)	17 Nm (3.4 Nm models), 27 Nm (9 Nm models)
Switch rating	25 V AC / 24 V DC (230 V models), 24 V AC / 24 V DC (24 V models), 3 A resistive

Power leads	0.8 m (230 V), 1 m (24 V), 18 AWG
Ambient temperature	-18°C to 55°C
Humidity	5–95% RH, non-condensing
Protection	IP40
Noise at 1 m	75 dBA driving, 20 dBA holding
Design life	30,000 full-stroke cycles
Weight	2.3 kg
Approvals	CE; UL/cUL and UL 60730 (optional)

Please note: The actuator's UL 555S rating applies only when tested with the damper. Honeywell recommends periodic testing of the complete smoke control system in line with local codes.

Dimensions & Wiring

Honeywell MS4604 · MS4609 · MS8104 · MS8109

DIMENSIONS (mm)

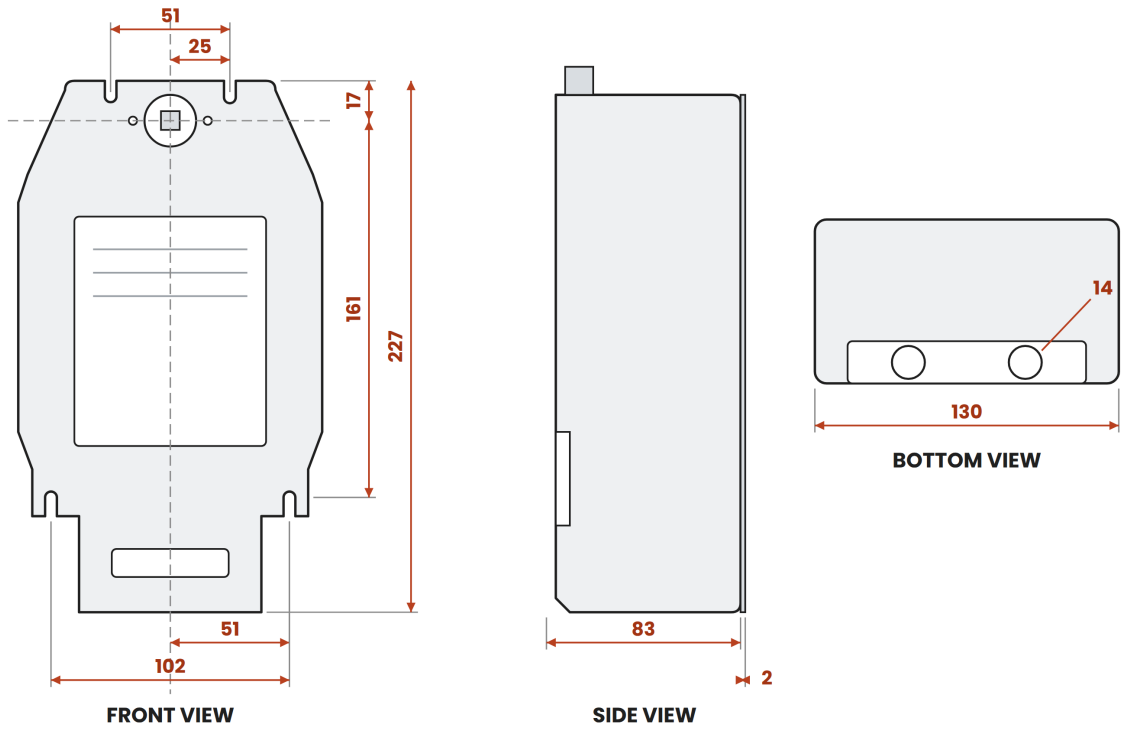

Outline simplified. Dimensions from Honeywell specification data 38-00006-04: 51 = spacing of top mounting slots; 102 = spacing of lower mounting slots. Weight 2.3 kg. Same housing for all four models.

WIRING

Lead	230 V (MS46xx)	24 V (MS81xx)
L1 (~), switched	Brown	Red
L2 (âŠ¥)	Blue	Black
Earth	Green	â€“
7Â° position switch	Blue / Blue	Blue / Blue
85Â° position switch	Yellow / Yellow	Yellow / Yellow

Controlled by a single-pole, single-throw (SPST) contact in L1. Position switches on F1210 models only, 457 mm leads, 18 AWG.

MOUNTING

- Direct coupled to a 12.7 mm (½″) round damper shaft with ¼″ set screws.
- Minimum damper shaft length 51 mm.
- Reversible mounting for clockwise or anticlockwise spring return.
- Do not use linkages: side-loading the output hub reduces actuator life.
- Mounting bracket 205649 available separately.
- The actuator must be tested with the damper to achieve the UL 555S rating.

ABOUT FLAMEFEND

FlameFend Ltd is a fire and acoustic safety specialist based in Wakefield, West Yorkshire, supplying UL-certified fire and smoke dampers and noise control solutions to the building services sector.

We work directly with M&E consultants, contractors and installers, from early specification through to delivery on site, giving you one responsive point of contact for technical support and supply.

WHAT WE OFFER

Schedule review	We check your damper schedule and recommend the right model for each location.
Direct supply	We supply direct from the manufacturer, with one contact from quote to delivery.
Technical submittals	Data sheets, UL certification and installation details for approvals and O&M files.
Global delivery	Delivery to site worldwide, arranged by us, with lead times confirmed at quotation.

HOW TO SPECIFY

Send us your damper schedule, or include the following for each damper and we'll come back with a full quotation.

Damper size	Width × height (mm), or duct diameter for round connections
Damper type	Curtain fire damper (FFD VS), multi-blade fire damper (MFD), smoke damper (MSD) or combination fire/smoke damper (MSFD)
Fire rating	1½ hour or 3 hour
System	Static or dynamic
Actuator voltage	24 V, 120 V or 230 V (motorised dampers only)
Fail position	Fail-close (standard) or fail-open
Limit switches	Required for BMS open/closed indication?
Installation	Wall or floor construction and mounting orientation
Quantity & project	Number of dampers, project name and required delivery date

Send your schedule for a quotation

cj@flamefend.com
+44 1924 586 625
www.flamefend.com



CLASSIFIED UL R27369

FLAME FEND

FIRE & SMOKE DAMPERS

Queens Court, 24 Queen St,
Wakefield, WF1 1LE

+44 1924 586 625

cj@flamefend.com

WWW.flamefend.com